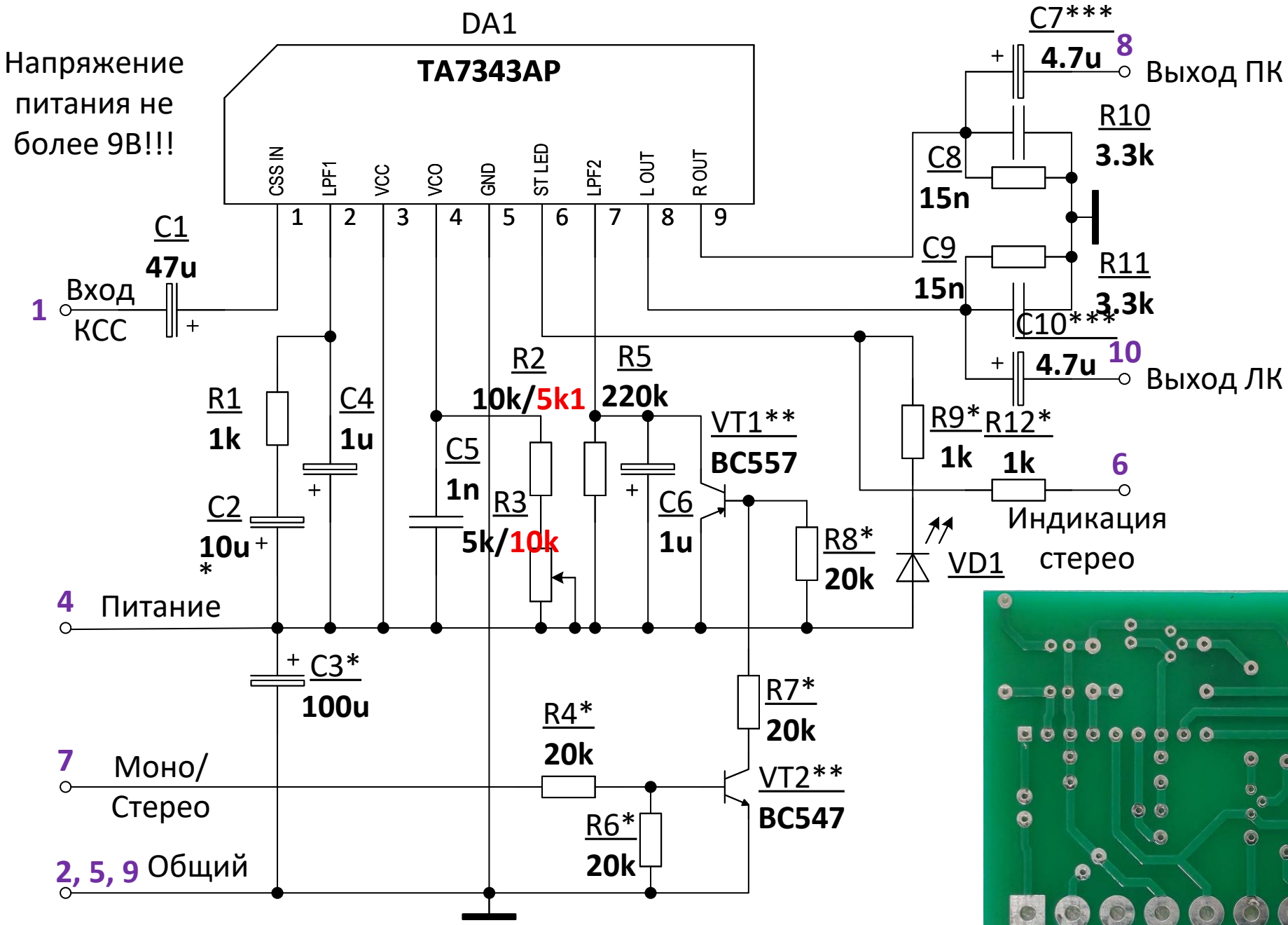

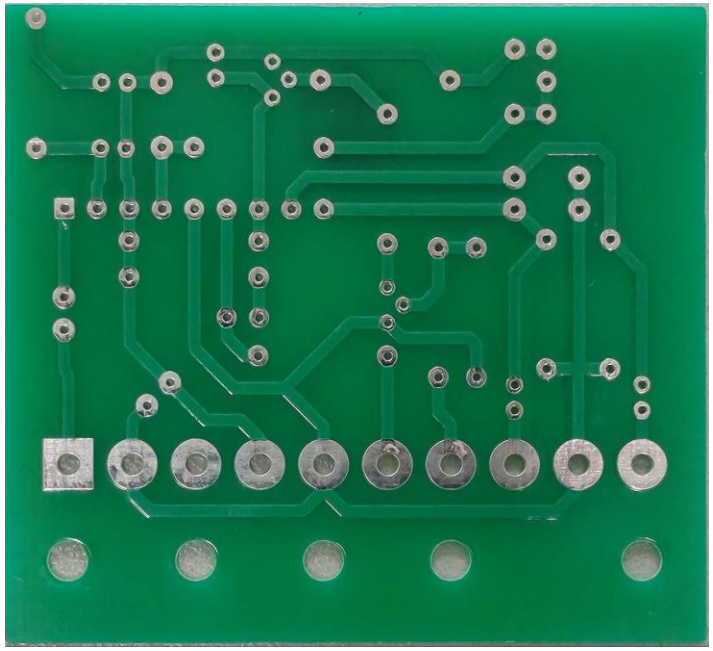

* - Номиал не критичен, допускается разброс +/-20%.

** - Транзисторы работают как ключи, модель не критична.

*** - Заменить перемычками в тюнере Радиотехника Т7111.

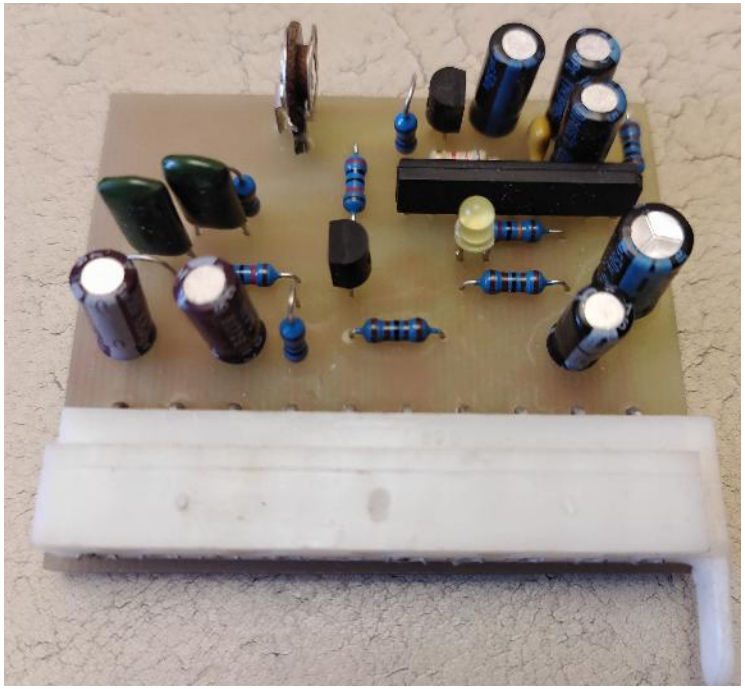

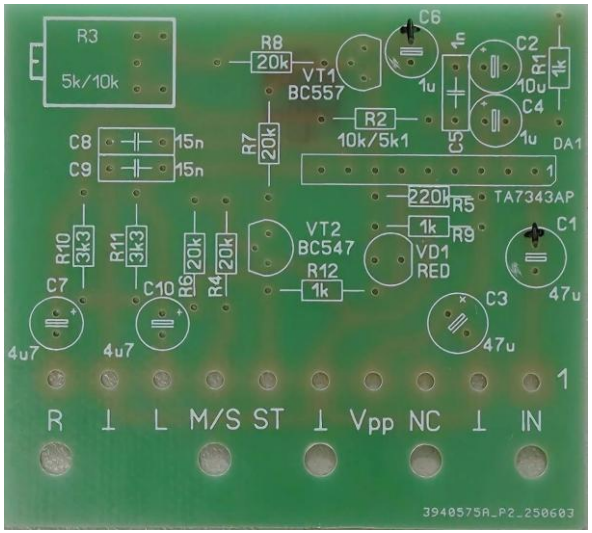

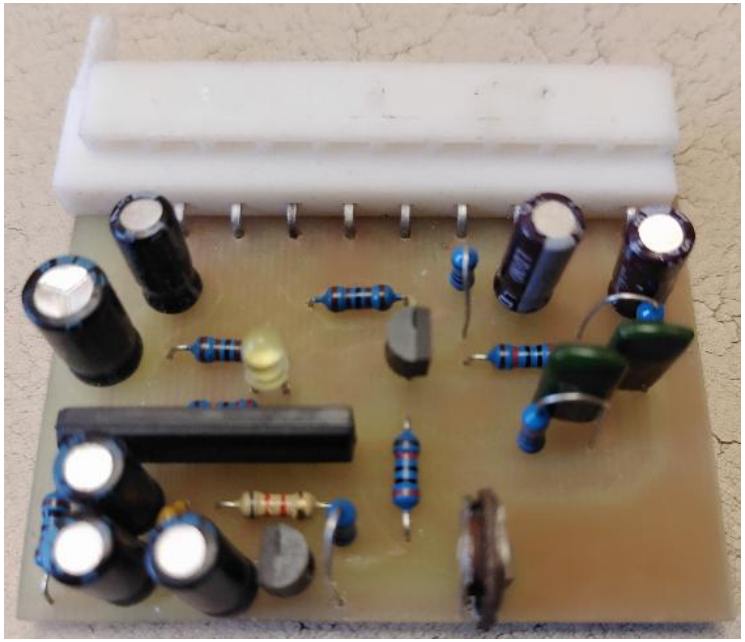

#	Pos	Type	Specification	Full name
1	R1	Resistor	1k 1/4W	Resistor- 1k 1/4W
2	R2	Resistor	10k 1/4W	Resistor- 10k 1/4W
3	R3	Resistor	5k Trim	Resistor- 5k Trim
4	R4	Resistor	20k 1/4W	Resistor- 20k 1/4W
5	R5	Resistor	220k 1/4W	Resistor- 220k 1/4W
6	R6	Resistor	20k 1/4W	Resistor- 20k 1/4W
7	R7	Resistor	20k 1/4W	Resistor- 20k 1/4W
8	R8	Resistor	20k 1/4W	Resistor- 20k 1/4W
9	R9	Resistor	1k 1/4W	Resistor- 1k 1/4W
10	R10	Resistor	3k3 1/4W	Resistor- 3k3 1/4W
11	R11	Resistor	3k3 1/4W	Resistor- 3k3 1/4W
12	R12	Resistor	1k 1/4W	Resistor- 1k 1/4W
13	C1	Capacitor	47uF 50V	Capacitor- 47uF 50V
14	C2	Capacitor	10uF 50V	Capacitor- 10uF 50V
15	C3	Capacitor	47uF 16V	Capacitor- 47uF 16V
16	C4	Capacitor	1uF 50V	Capacitor- 1uF 50V
17	C5	Capacitor	1nF 50V	Capacitor- 1nF 50V
18	C6	Capacitor	1uF 50V	Capacitor- 1uF 50V
19	C7	Capacitor	4.7uF 50V	Capacitor- 4.7uF 50V
20	C8	Capacitor	15nF 50V	Capacitor- 15nF 50V
21	C9	Capacitor	15nF 50V	Capacitor- 15nF 50V
22	C10	Capacitor	4.7uF 50V	Capacitor- 4.7uF 50V
23	DA1	IC	TA7343AP	IC - TA7343AP
24	VT1	Transistor	BC557	Transistor- BC557
25	VT2	Transistor	BC547	Transistor- BC547
26	VD1	LED	Yellow	LED - Yellow
27	X1	Connector	CHP40-10	Connector- CHP40-10